"Jožef Stefan" Institut, Ljubljana, Slovenia
Energy Efficiency Centre

OSCOGEN

# Model for CHP operation optimisation

Stane Merše, M.Sc., Andreja Urbančič, M.Sc.
*stane.merse@ijs.si, www.rcp.ijs.si/~eec/*

**Workshop Cogeneration Operation in Competitive Markets**

**22-23 January 2003, St. Veit a.d. Glain, Carinthia, Austria**
**Industriepark, Greenonetec**



OSCOGEN

## Outline

1. Problem formulation
2. Model definition on TETOL case study
3. Example of modeling approach for Steam boiler characteristics definition
4. Conclusions

## Problem formulation

- Key project task:
  - long-term & short-term optimization tool for efficient CHP plant operation in new market conditions
- Optimization objectives (short term)
  - Optimal CHP operation
  - Optimization criterion - economic
  - Considering market environment and uncertainties



## Optimization results - deterministic model

- The optimization tool will enable to:
  - reduce operation cost (and/or) increase incomes from electricity sales
- by:
  - computation of optimal operation load by production units (Load dispatching - Linear programming)
  - computation of optimal start up - times (Unit commitment - Genetic alghoritem - GA)
  - computation of optimal charging/discharging dynamic of heat storage

## Model definition objectives

- to build the system model **simple enough to enable application of faster optimisation algorithms**,
- to reach the accuracy of the model high enough, to have **robust answers on the system optimal response** to the changes of varying external parameters in ranges of their expected values,
- to express the model relations in the most general form in order to enable designing the description of the search space which suites the most for GA needs. **This is intended particularly to open other modelling options, besides the most known, MILP form for the unit commitment problem**.
- time accuracy 1h - **static model** (dynamic Heat storage)



## Modeling approach on TETOL case study

- Scope of the model
  - The TE-TOL (CHP plant Ljubljana) system
  - Deterministic non-linear model
  - Accurate and simple for short term optimization:
    - daily; weekly
  - Extension to the long-term model
  - Heat demand - planned
  - Status of TE-TOL on the electricity market:
    - fixed contracts, preference dispatching, efficiency constraints

# MODELLING ISSUES ADDRESSED

- Non-linearity
  - Boiler characteristics non-linearity's
  - Heat sub-stations capacities/dependent on external parameters (distribution heat system return temperature, which can not be optimised)
  - Sensitivity analysis to start-up costs (lack of appropriate data - constant estimate)
- End of interval values
  - Heat storage boundary conditions
  - Qualified electricity producers status compliance (efficiency constraint)



# TE-TOL CHP system

- Boilers (B)
  - 3 coal steam boilers (B1, B2, B3)
  - 2 fuel oil peak-load steam boilers (B6, B7)
  - 2 fuel oil peak-load hot water boilers (B4, B5)
- Steam turbines (T)
  - T1, T3 - Extraction condensing
  - T2 - Back pressure extraction
- 2 steam extraction levels (8.5 bar and 2.5 bar)
- Heat storage unit (SU)
- Heat exchangers (HE) – high & low pressure (LP1, LP2, HP1, HP2)
- Steam demand (8.5 bar) and hot water demand

# HEAT DIAGRAM OF THERMO POWER PLANT LJUBLJANA

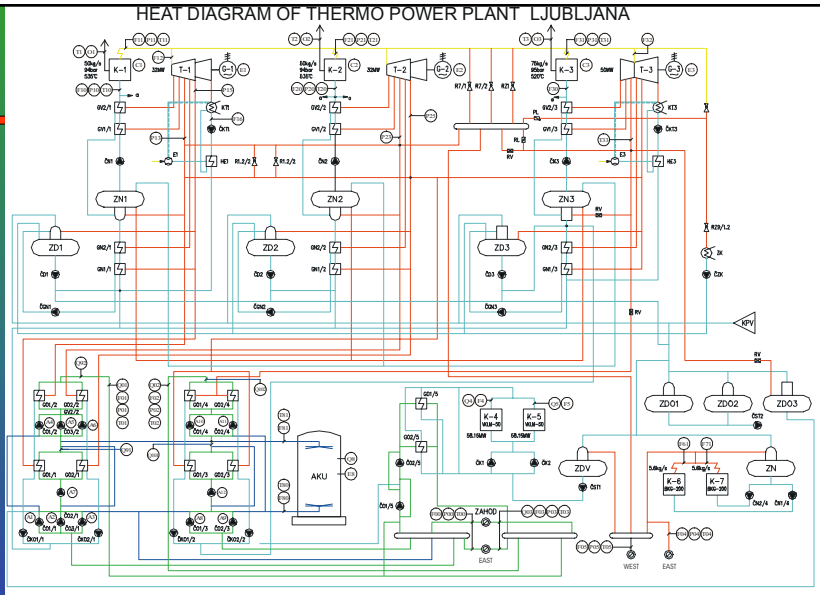


LEGEND:

AKU - Heat storage tank
ČD - Make-up water pump
ČGN - Condensate pump
ČK - Hot water boiler pump
ČKT - Turbine condensate pump
ČKO - Heater condensate pump
ČN - Feedwater pump
ČO - Water pump
ČST - Static pressure pump
ČZK - Condensate pump of start-up condenser

G - Generator
GN - Low-pressure heater
GO - Water heater
GV - High-pressure heater
HE - Ejector cooler
E - Ejector
K - Boiler
KPV - Chemical water treatment
KT - Turbine condenser
PL - Check valve

R - Cold reduction station
RL - Control flap
RV - Control valve
RZ - Start-up reduction station
T - Turbine
ZD - Make-up water collector
ZDO - Raw make-up water collector
ZDV - Make-up water collector of hot water boiler
ZN - Feed-water collector
ZK - Start-up condenser

- LIVE STEAM PIPE
- STEAM LINES FROM 0 TO 50 BAR
- HEATING WATER PIPES
- CONDENSATE OR FEED-WATER PIPES
- PIPING TO HEAT STORAGE TANK



# Reference energy system TE-TOL

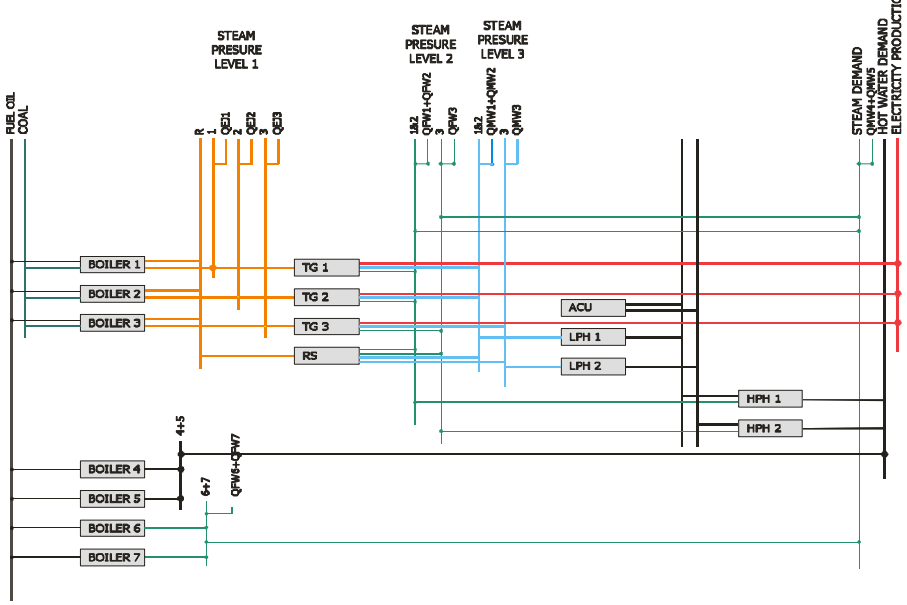

# TE-TOL model elements

- Equations in optimization:
  - I/O characteristics: boilers, turbines
  - dynamic model: heat storage
  - constraints - unit bounds (min/max)
  - heat balances by pressure level
- Parameters:
  - data from available measurements (on line, unit's documentation, etc.) were used



# Mathematical models/ devices

**Identification and selection of approximation options:**

- Boiler characteristics
  - constant (auxiliary boilers) / linear (main boilers)/ piece-wise linear (tested)/ quadratic
- Turbine characteristics
  - linear/ piece-wise linear/ quadratic
  - sum of extraction flows/ separate flows by extraction level (for steam turbines)
- Boiler start-up costs
  - constant/ linear/ piece-wise constant/ exponential
- Heat station bounds
  - constant/ linear/ piece-wise linear/ other: constant - varying by time interval with temperature forecast

# STEAM BOILERS

Variables
- Q ... flows
- s … ON/OFF status

Characteristics and bounds
- I/O characteristics: $Q_{fuel} = f(Q_{out})$
- technical minimum/maximum
- gradients
- minimal on and off time

In cost function
- fuel costs
- variable O&M (non-fuel) costs
- start-up costs (fuel related)

Approximation options
- *L /PWL, fuel costs,*
- *C, start up costs*

*Technical parameters*
- *efficiencies were determined by an indirect method from measured data*
- *gradients from operation manual*
- *off-time: TE-TOL data*

*Cost function parameters*
- *fuel, O&M costs approximated from annual values*
- *start costs - current estimate*



# BOILER EFFICIENCY
## data collection and modelling

**Efficiency determined by indirect method from measurements**

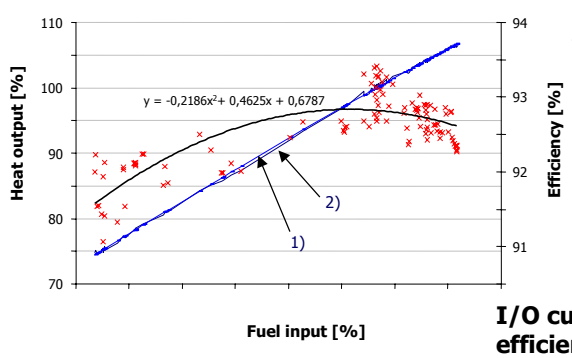


Influencing parameters
- outdoor temperature
- flue gases temperatures
- $O_2$ in flue gases
- output mass flow

**I/O curves derived from efficiency**
1) point-wise
2) from quadratic fit of efficiency

# BOILER I/O CHARACTERISTICS

- linear approximation (L)

$$\dot{Q}_{FUEL}(t) = a\,\dot{Q}(t) + bO(t)$$

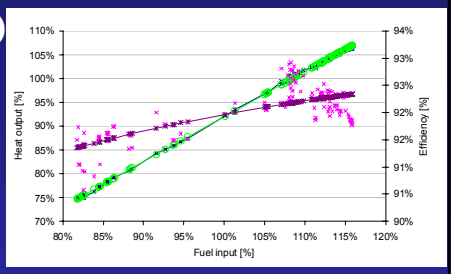


- piece-wise linear approximation (PWL)

$$\dot{Q}_{FUEL}(t) = \sum_{i=1}^{N} k_i\,\dot{Q}_i(t) + c_0 O(t)$$

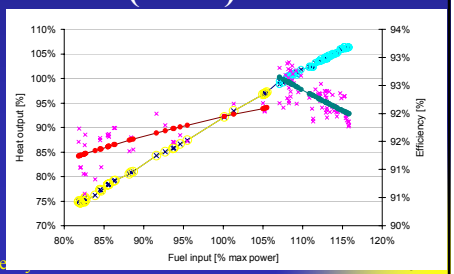




# The impact of L & PWL differences on optimisation results (MILP)

Heat and electricity production

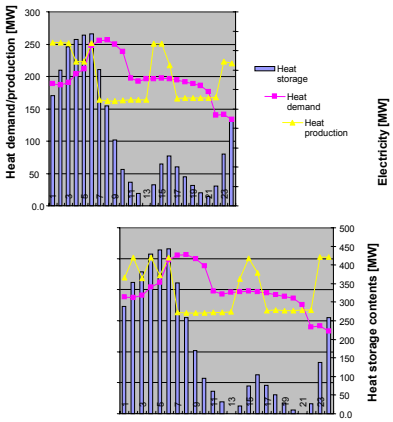


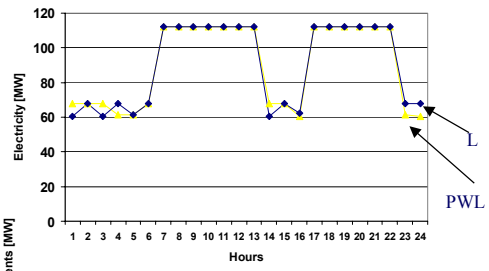

## Comparison of results

- Optimal solutions were equivalent for both cases:
  - same optimal cost function value, electricity production,
  - amount of heat storage in-outflow over period,
  - some differences between hours: similar operation status have changed the time of occurrence,
  - some difference in heat contents at the end of period (due to shift of production between hours).
- Conclusion:
  - Optimisation results as well show that linear fit is accurate in a sense that, the improved fit by a piece wise function do not affect the optimal result.



## HEAT SUB-STATIONS - capacity limits

- Capacity limits at heat sub-station:
  - Low pressure heat exchanger capacity limit depends on district heating return water temperature (varying by heat demand, outdoor temperature) and on heat storage water temperature
- Modelling options:
  - Constant/ linear/ piece-wise linear/ other:
    - constant - varying by time interval with temperature forecast - outside the model (model input data)

## TE-TOL model – MILP formulation

For each hour:

- 15 independent real variables
- 8 integer (binary) variables
- 44 inequality equations
- 2+1 equality equation (DH, Steam, + Electricity)



## Long term model approximation

- less detailed description - reduction of model complexity:
  - linear relations,
  - constant efficiencies (independent from load)
    - difference from 2 to 10%

# Conclusions

- **Linear modelling** gives comparable results, but with significant reduction in computational time compared to more detailed non-linear modelling.
- **CHP optimisation problem** was defined as a linear mixed-integer problem (MILP), divided into two sub-problems:
  - unit commitment (UC) - solved using a GA
  - economic dispatch (ED)- by linear programming (LP)
- **Dynamic extensive process** - going on with further model testing and validation, future changes, etc.
- For more details about modeling (equations, etc.), look in **Project Deliverables (D 1.4, D 2.1, D 2.2, …)**



# Thank you for your attention!

Stane Merše, M.Sc., Andreja Urbančič, M.Sc.
*stane.merse@ijs.si, www.rcp.ijs.si/~eec/*

**Workshop Cogeneration Operation in Competitive Markets**

**22-23 January 2003, St. Veit a.d. Glain, Carinthia, Austria**
**Industriepark, Greenonetec**